PARTS DIAGRAM 1

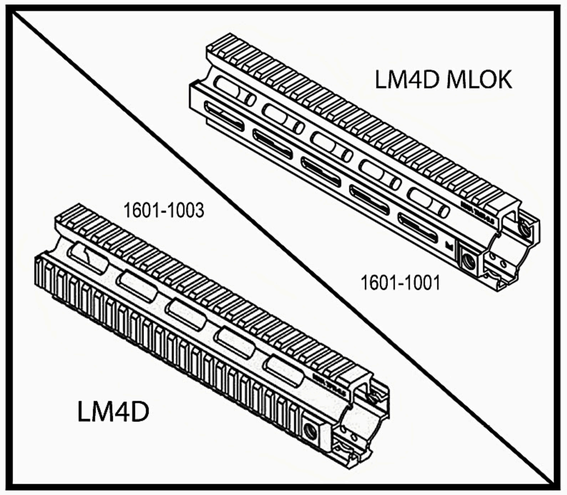

2001S

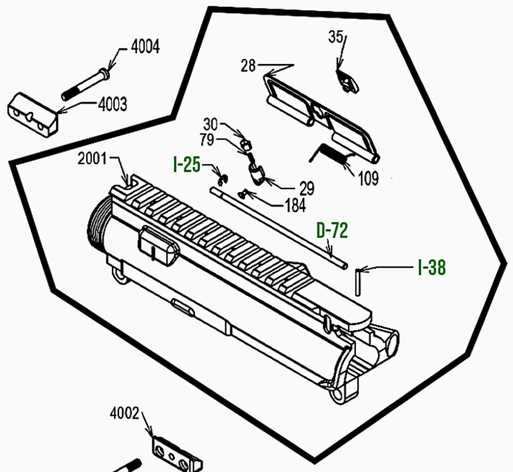

2002S

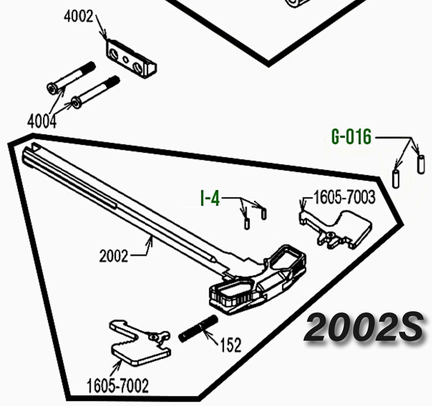

3004S

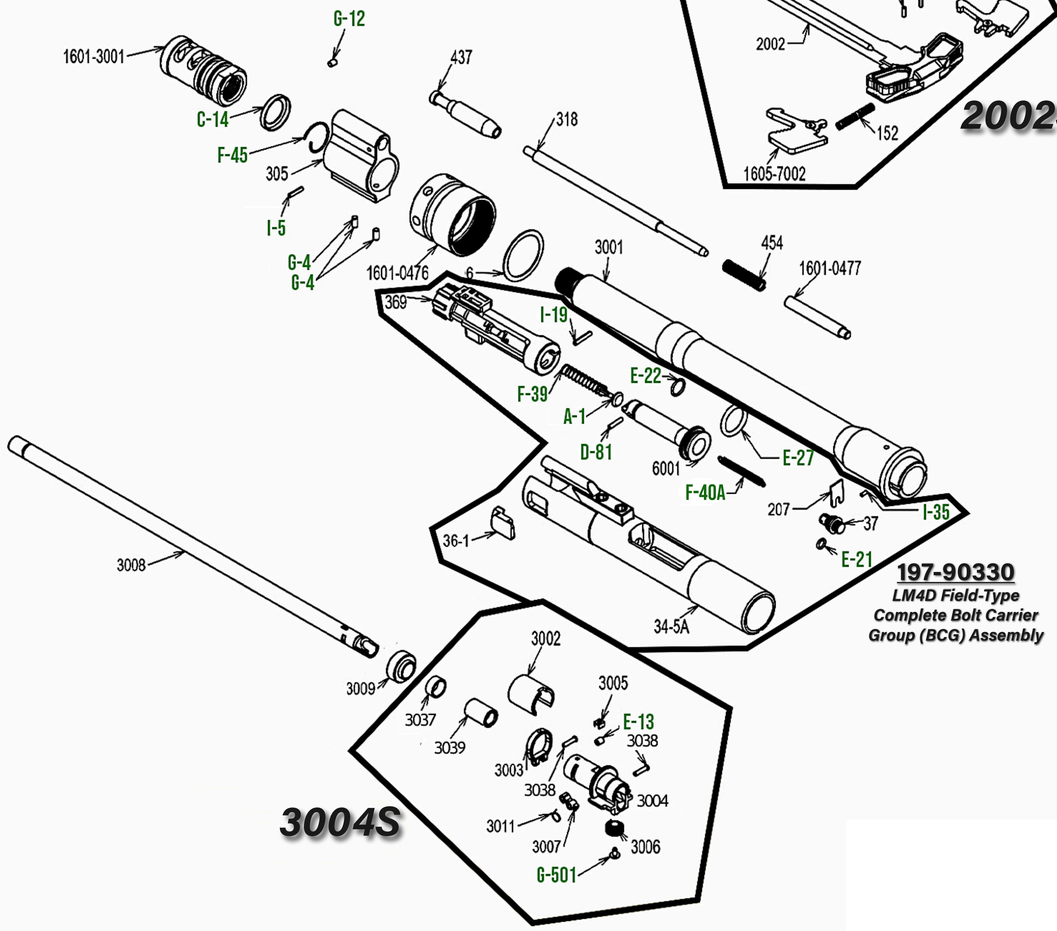

197-90330
LM4D Field-Type Complete Bolt Carrier Group (BCG) Assembly

PARTS DIAGRAM 2

5001S

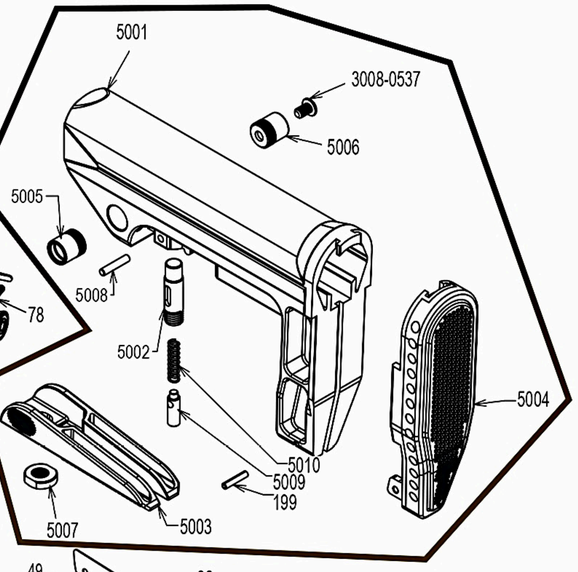

31-5S

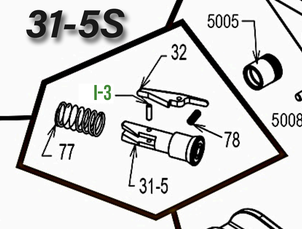

12S

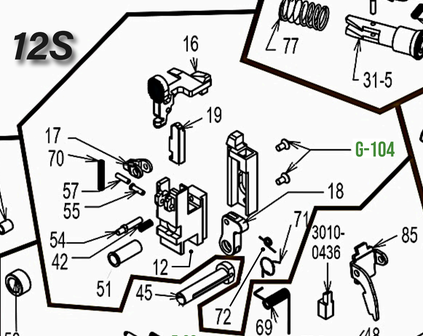

13S

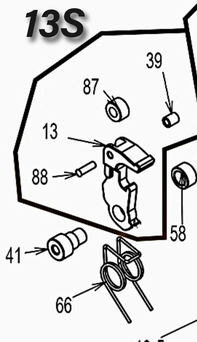

63S

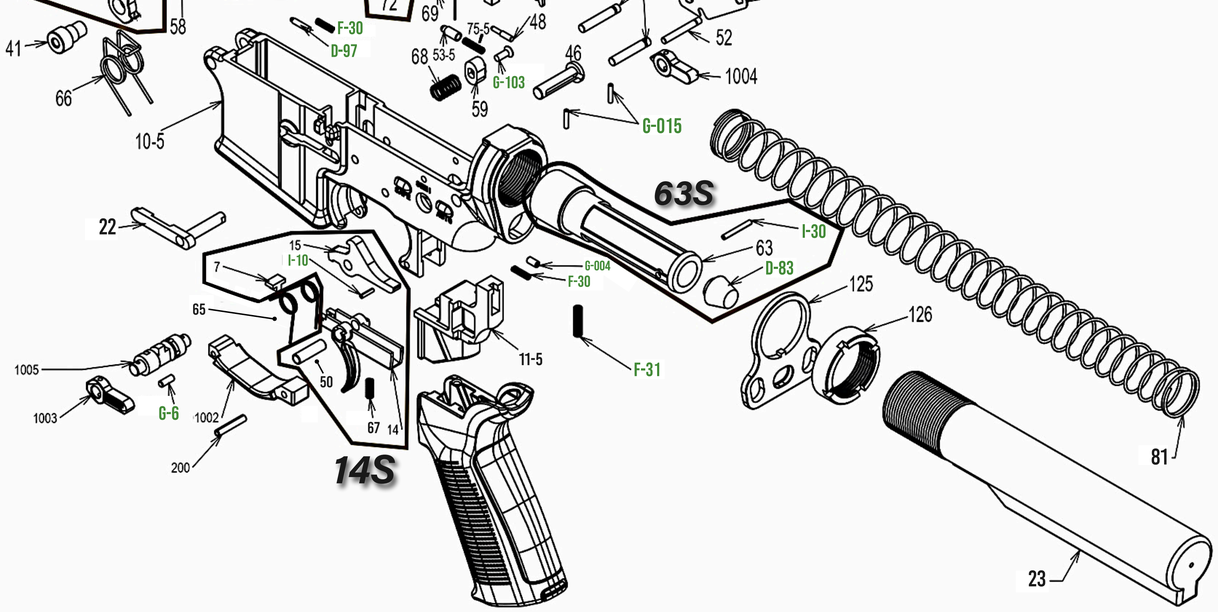

14S