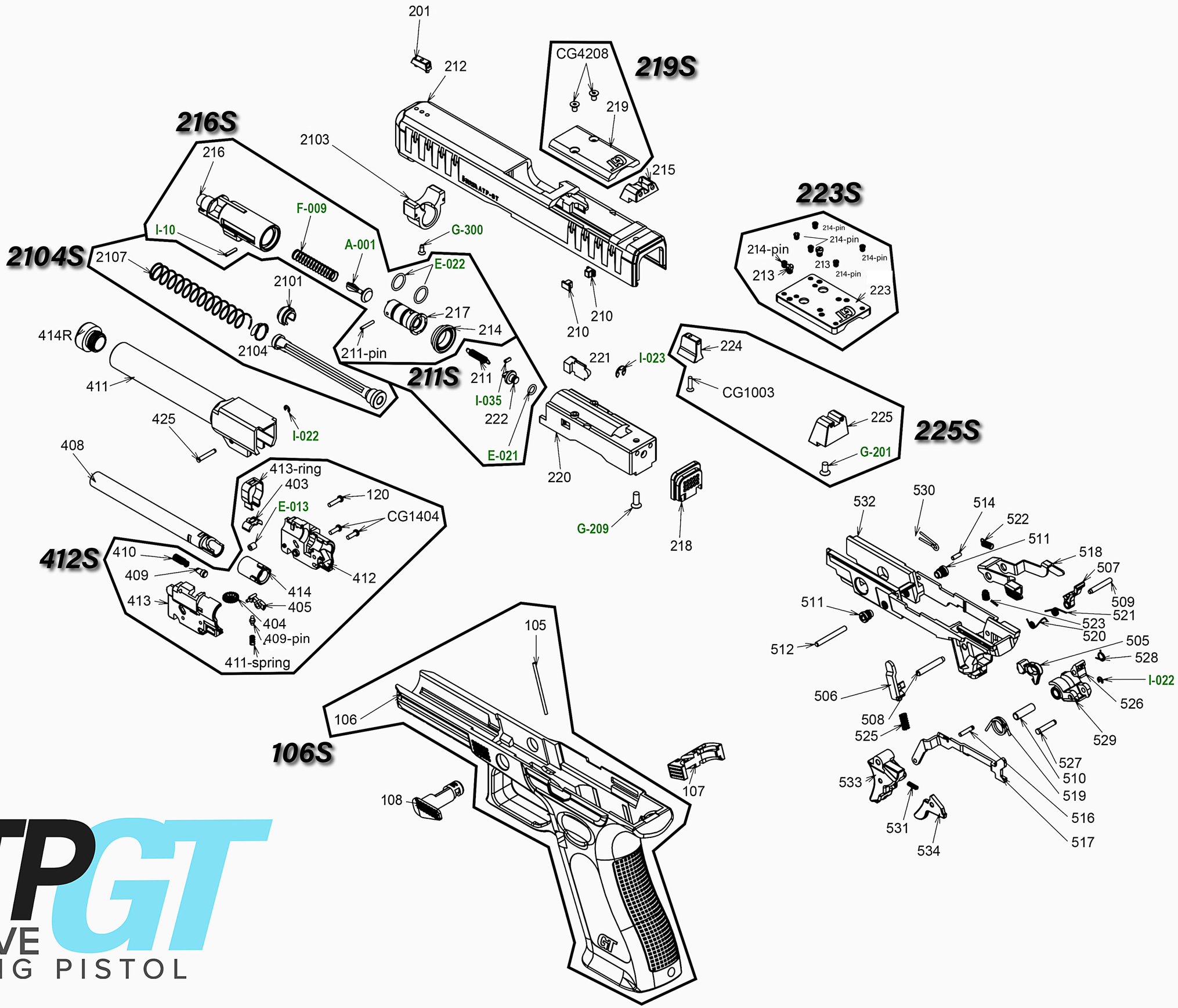

ATPGT
ADAPTIVE
TRAINING PISTOL