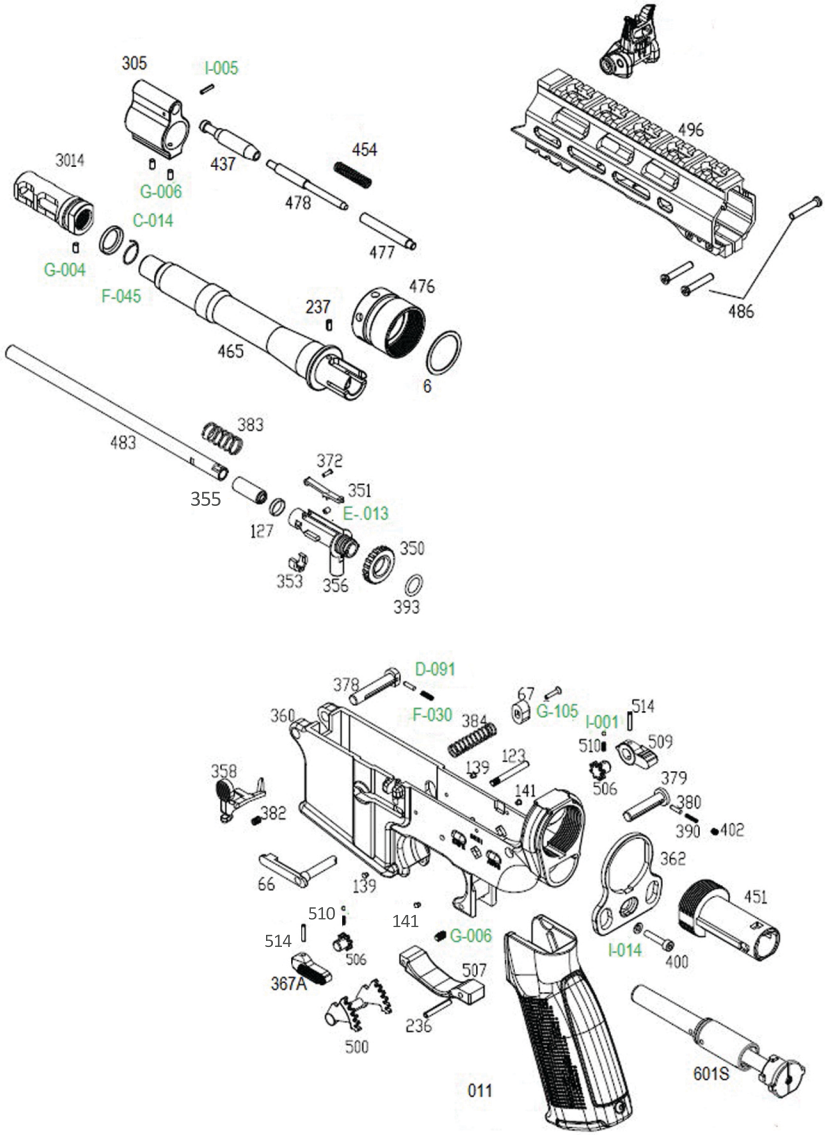8 - PARTS DIAGRAM PAGE 2