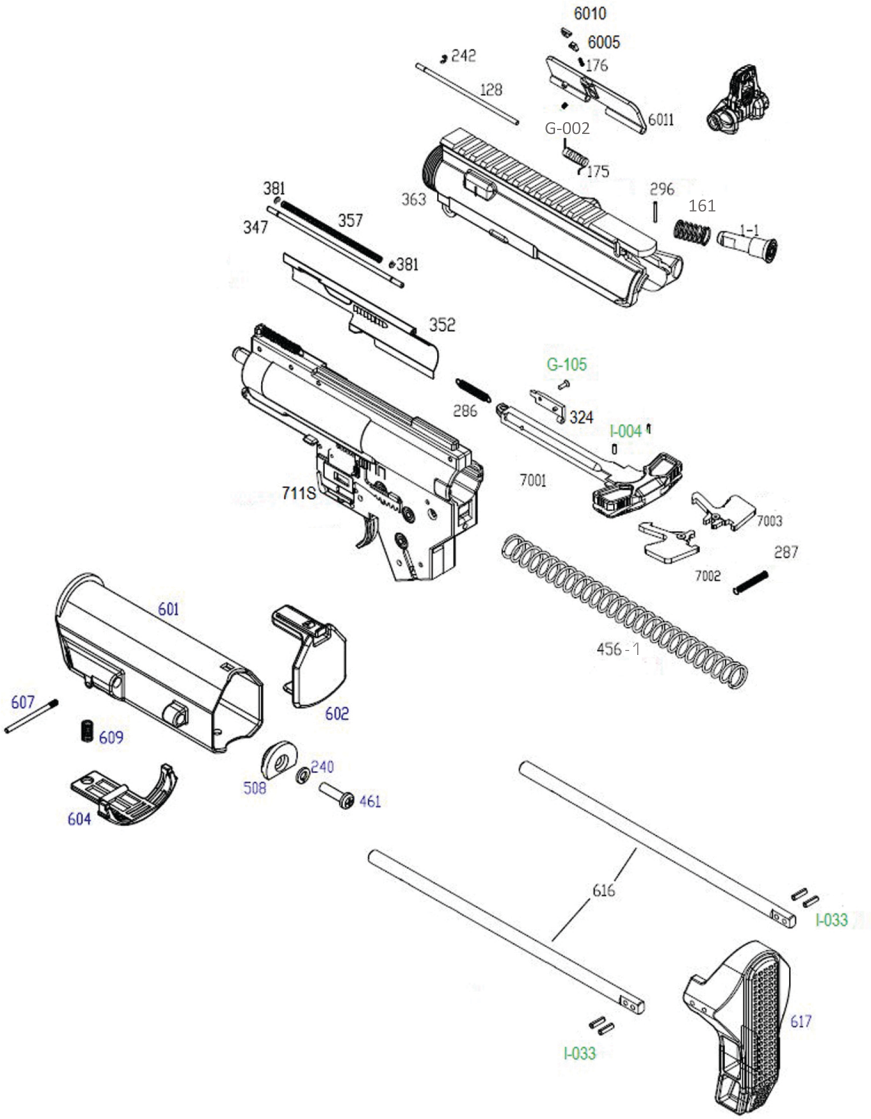7 - PARTS DIAGRAM PAGE 1